Thule UpRide

599001

THULE SWEDEN

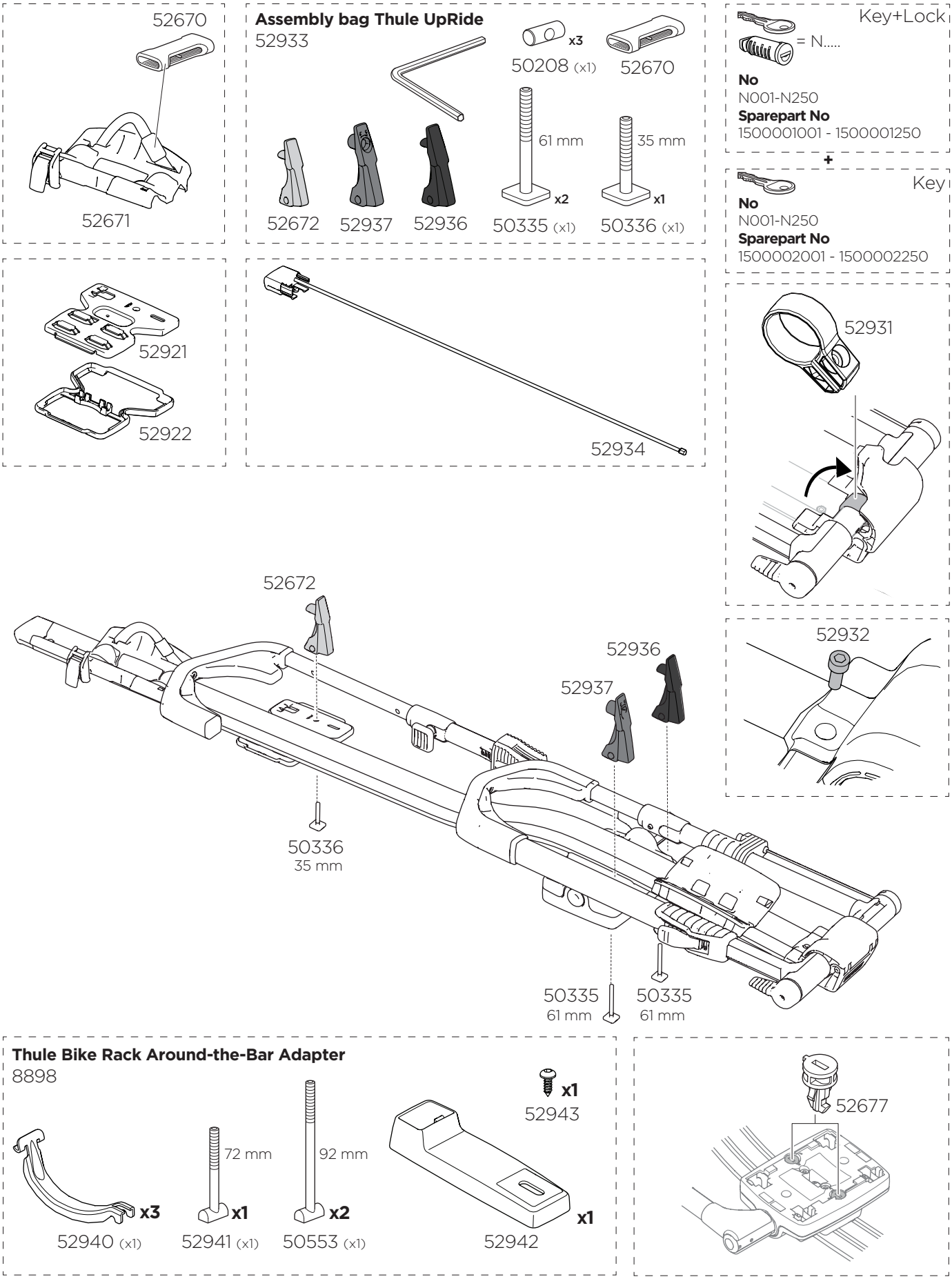

PART OF THULE GROUP